Power Connection Kit Installation Instructions

Terminator ZP-M

for use with TEK and HTEK series constant watt heating cables

For Power Connection (1 Cable), In-Line Splice Connection,
or End Termination (1 Cable) Applications

Item	Qty	Description
1	1	**Support Cap w/ O-ring**
2	1	**Threaded Grommet Compressor**
3	3	**Grommets (GRW-L, GRW-G, and GRW-F)**
4	1	**Support Base w/ O-ring**
5	1	**Junction Box Lid**
6	1	**Junction Box Base w/ O-ring**
7	1	**Nut**
8	1	**Banding**
9	1	**Banding Guide**
10	1	**Terminal Block Jumper**
11	1	**Terminal Blocks w/ DIN Rail** (Refer to terminal specifications for maximum allowable wire size)
12	1	**Ground Sleeves**
13	1	**Junction Box Cord**

Tools Required

Certifications/Approvals

IP66 NEMA/Type 4X -60°C ≤ Ta ≤ +55°C
Ordinary & Hazardous Locations
Class I, Division 2, Groups A, B, C & D
Class II, Division 2, Groups F & G, Class III
Class I, Zone 1, AEx e II T4-T6
Ex e II T4-T6

Warnings

- Due to the risk of electrical shock, arcing and fire caused by product damage or improper usage, installation or maintenance, a ground-fault protection device is required.
- Installation must comply with Thermon requirements and be installed in accordance with the NEC, CEC, or any other applicable national and local codes.
- Install correct heating cable lengths indicated in the design. Any deviations from these lengths will result in a change in outputs.
- Component approvals and performance ratings are based on the use of Thermon specified parts only. User supplied power connection fittings must be European certified for Ex e or EEx e or UL Listed or certified for AEx e (North America only).
- De-energize all power sources before opening enclosure.
- Keep ends of heating cable and kit components dry before and during installation.

Cable Type
HTEK 3C60
HTEK 3C50
TEK 3C70

Cable Type
HTEK 3C40
HTEK 3C30
HTEK 2C70
HTEK 2C60
TEK 3C60
TEK 3C50
TEK 2C70

Cable Type
HTEK 2C50
HTEK 2C40
HTEK 2C30
TEK 3C40
TEK 3C30
TEK 2C60
TEK 2C50
TEK 2C40
TEK 2C30

GRW-L	GRW-G	GRW-F
12 mm x 5 mm Opening	9 mm x 5 mm Opening	7 mm x 4 mm Opening

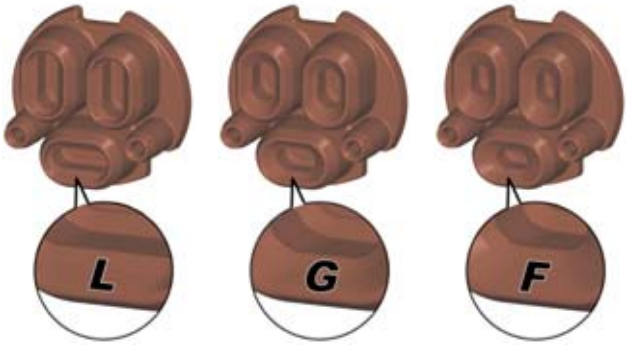

1. **Select appropriate grommet for specific cable type.**

2. **Put together expeditor assembly. Place grommet in support base. Snap threaded grommet compressor into support base. Screw support cap onto support base.**

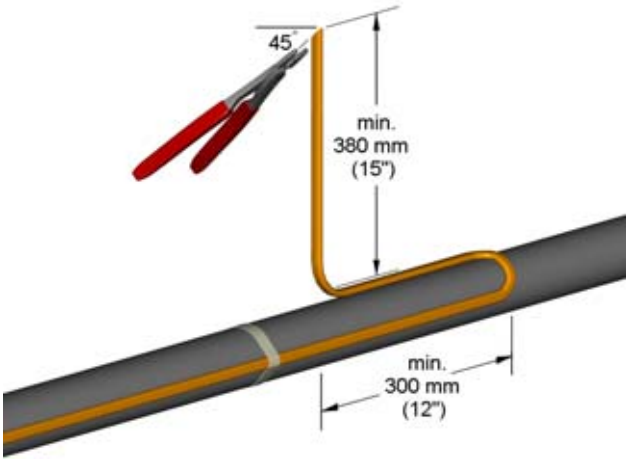

3. **Cut end of cable at angle (or use screwdriver) to aid in piercing grommet. Leave additional cable for expansion loop. See page 11 for in-line splice (two cable) installation tips.**

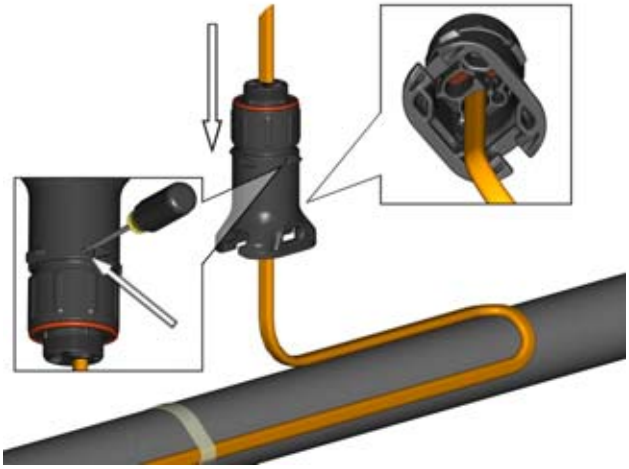

4. **Insert cable into expediter. If mounted on bottom of pipe, punch out weep hole.**

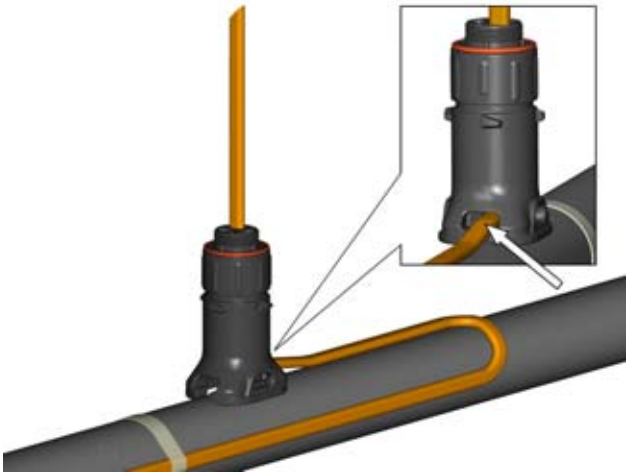

5. **Slide expediter toward pipe and route cable through support base entry.**

6. **Insert banding guide into expediter and snap into place.**

9. **Cut and remove overjacket by scoring overjacket and bending cable. Do not cut metallic braid.**

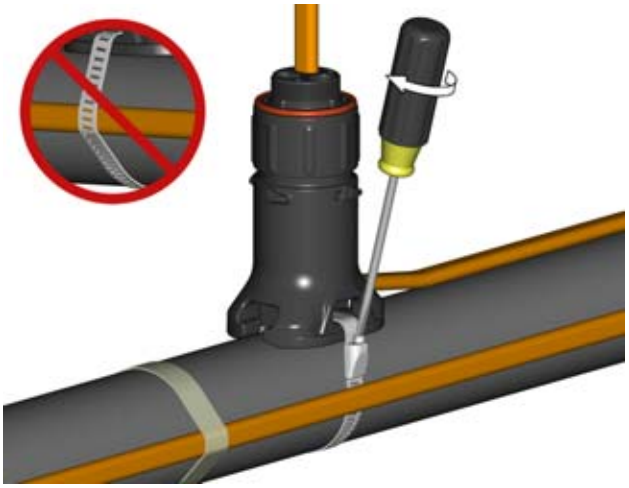

7. **Mount expediter to pipe using pipe band. Do not band over cable.**

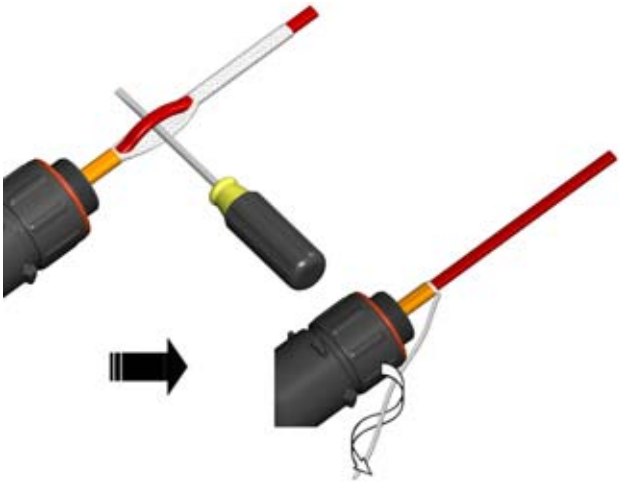

10. **Separate braid strands at edge of overjacket and pull cable through opening in braid. Twist braid into a pigtail. Trim ends of braid.**

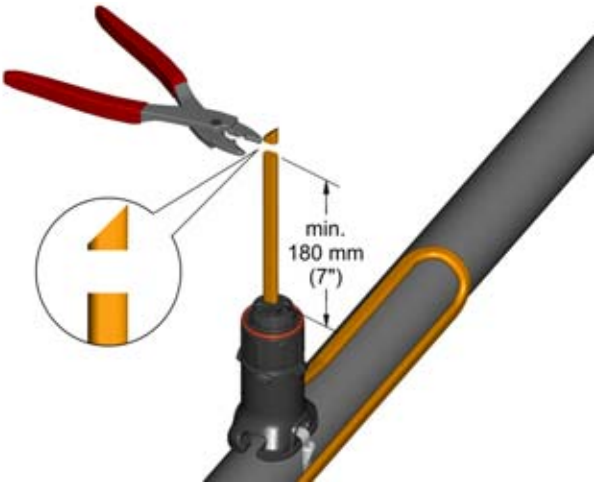

8. **Cut off end of cable.**

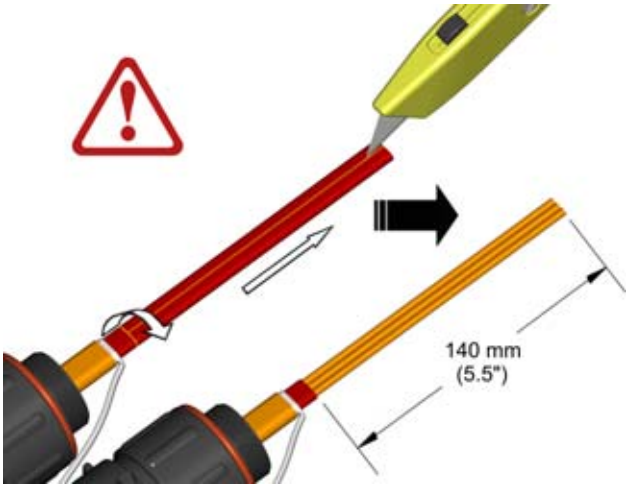

11. **Cut and remove pairing jacket by scoring pairing jacket and bending cable. Do not cut insulation on conductors.**

Note: Three (3) conductor cable is shown in the instructions and is representative of two (2) conductor cable installations.

12. **Remove insulation and fiberglass braid (HTEK only) from ends of each conductor. Do not cut bus wire strands.**

13. **Slide green/yellow ground sleeve over twisted braid.**

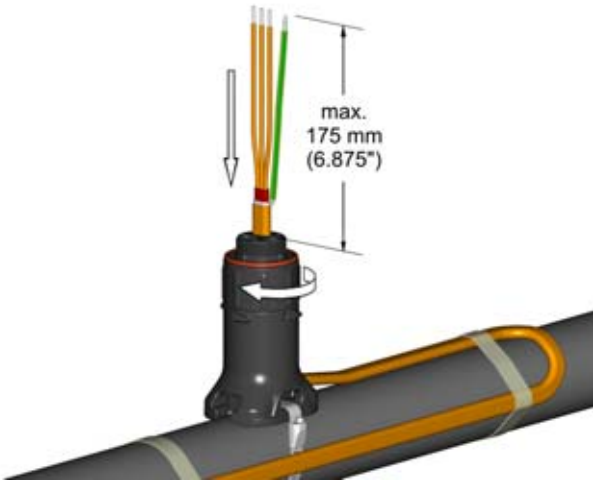

14. **Push excess cable back through expediter. Tighten cap securely. Tape cable expansion loop to pipe.**

15. **Using dimple molded into side of junction box base to locate center of hole, drill for user supplied power connection fittings per manufacturer's recommendations (if necessary).**

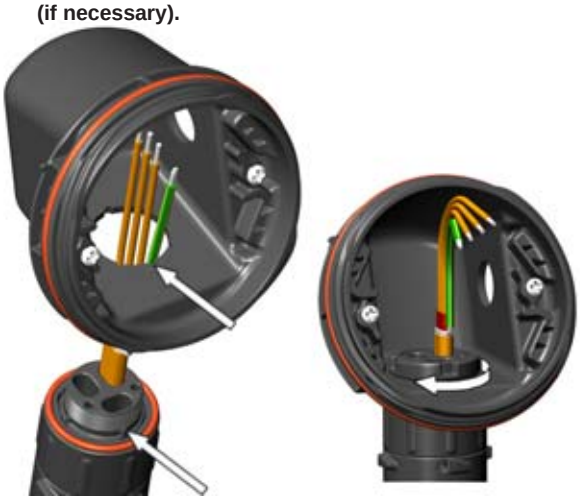

16. **Mount junction box base on expediter. Make sure to align slots to properly orient junction box base.**

17. **Install power connection fittings (user supplied) and pull in power and ground wires (if necessary).**

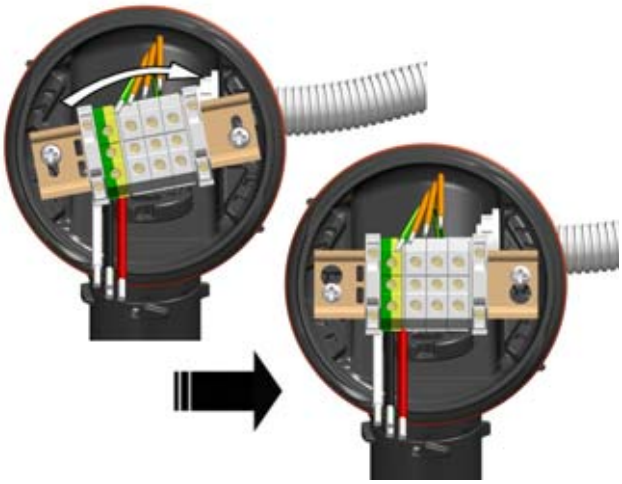

18. **Install quick mount terminal blocks.**

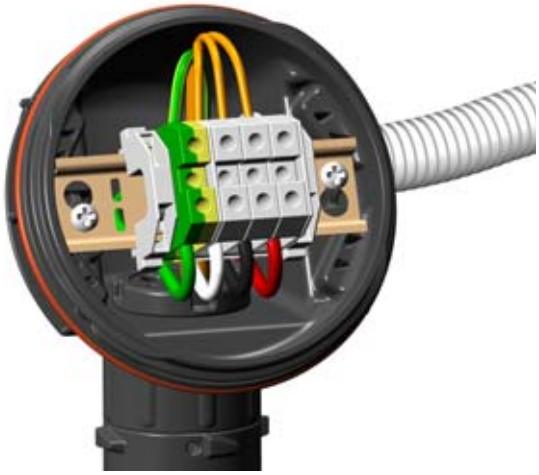

19. **Complete system wiring. Terminal set screws shall be tightened to a torque value of 2.0 Nm (18.0 lb-in). See page 12 for wiring details for two conductor cables and page 13 for three conductor cables.**

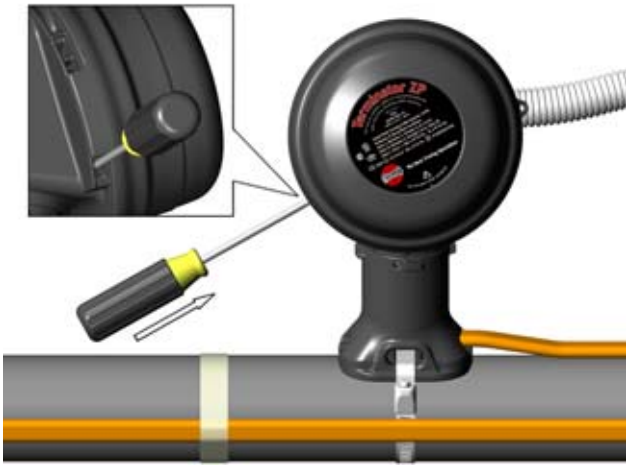

20. **Install junction box lid and twist hand tight. Insert screwdriver into ratchet slots located on side of junction box base.**

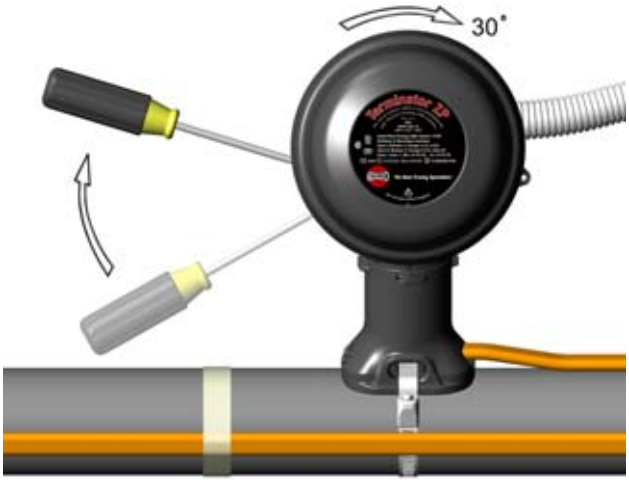

21. **Use screwdriver to ratchet on junction box lid. Lid will rotate 30 degrees.**

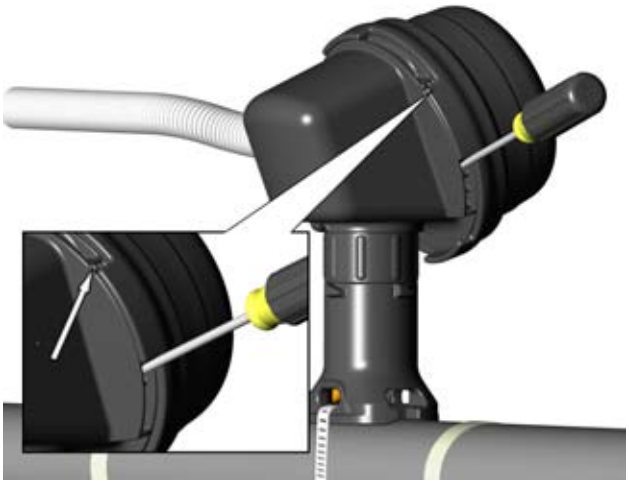

22. **Lid latch mechanism fully engaged.**

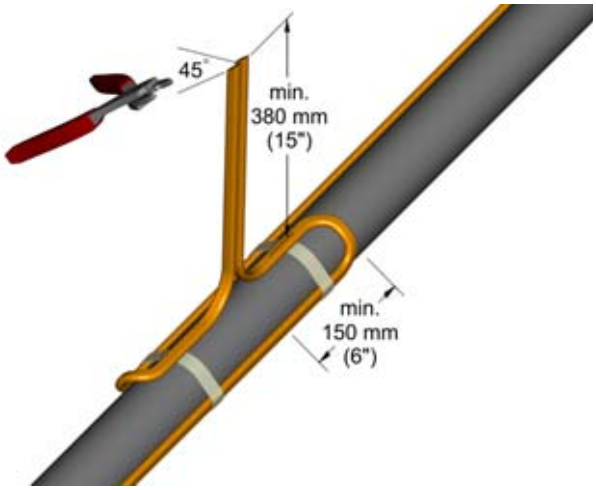

A1. **Cut end of cable at angle (or use screwdriver) to aid in piercing grommet. Leave additional cable for expansion loop.**

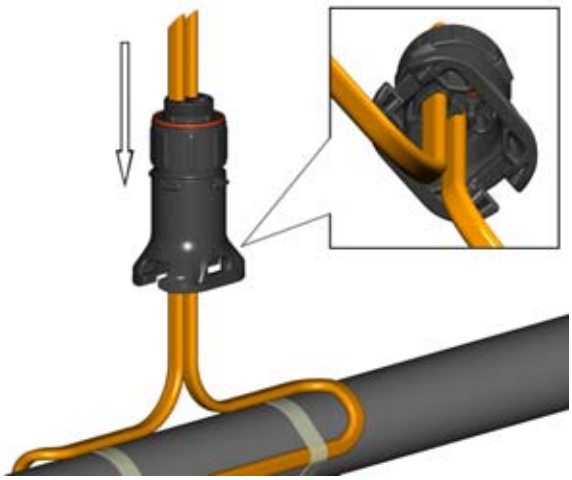

A2. **Insert two cables into expediter.**

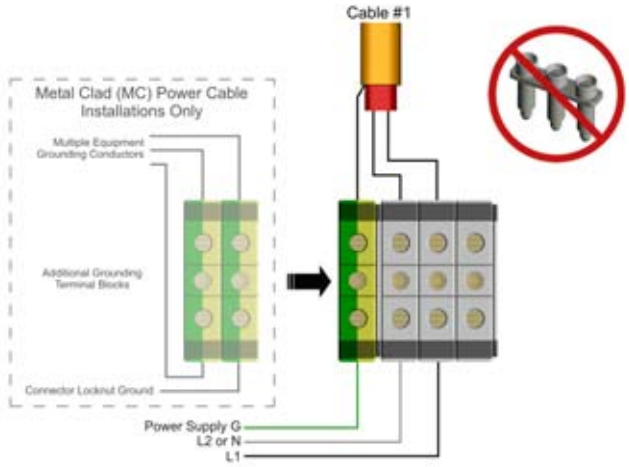

B1. **Power Connection (1 Cable)**

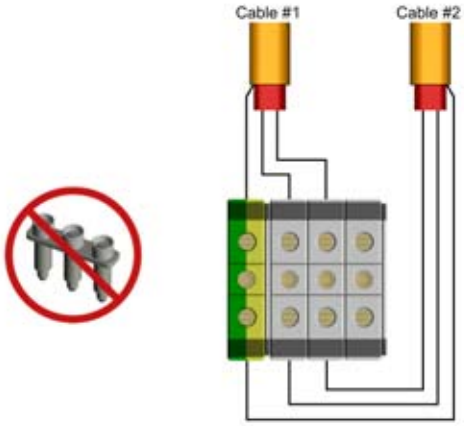

B2. **In-Line Splice**

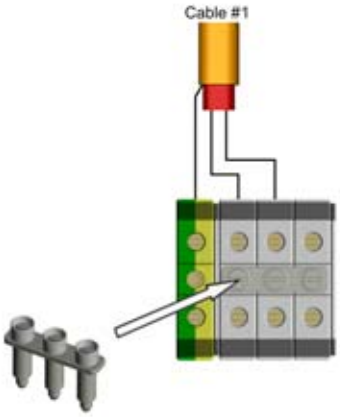

B3. **End Termination (1 Cable Only)**
Install jumper to terminal blocks.

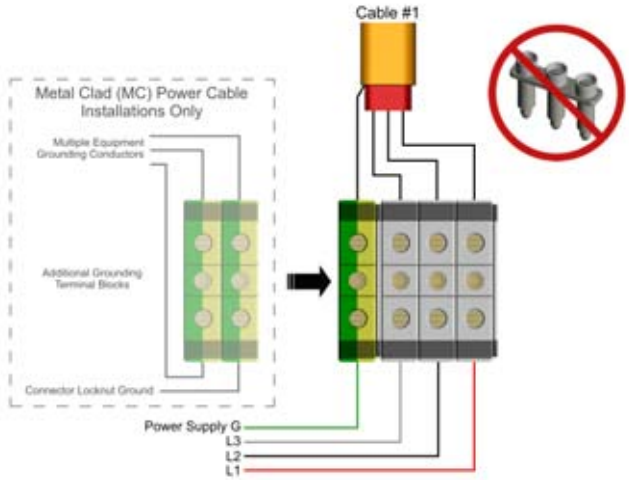

C1. **Power Connection (1 Cable)**

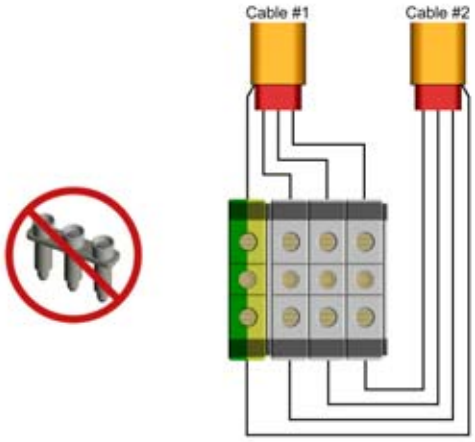

C2. **In-Line Splice**

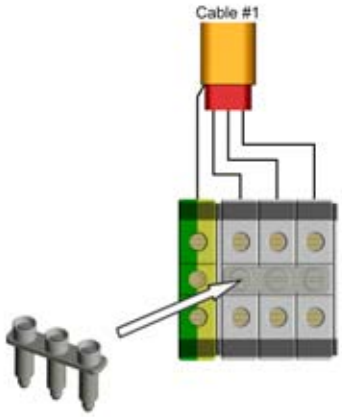

C3. **End Termination (1 Cable)**
Install jumper to terminal blocks.

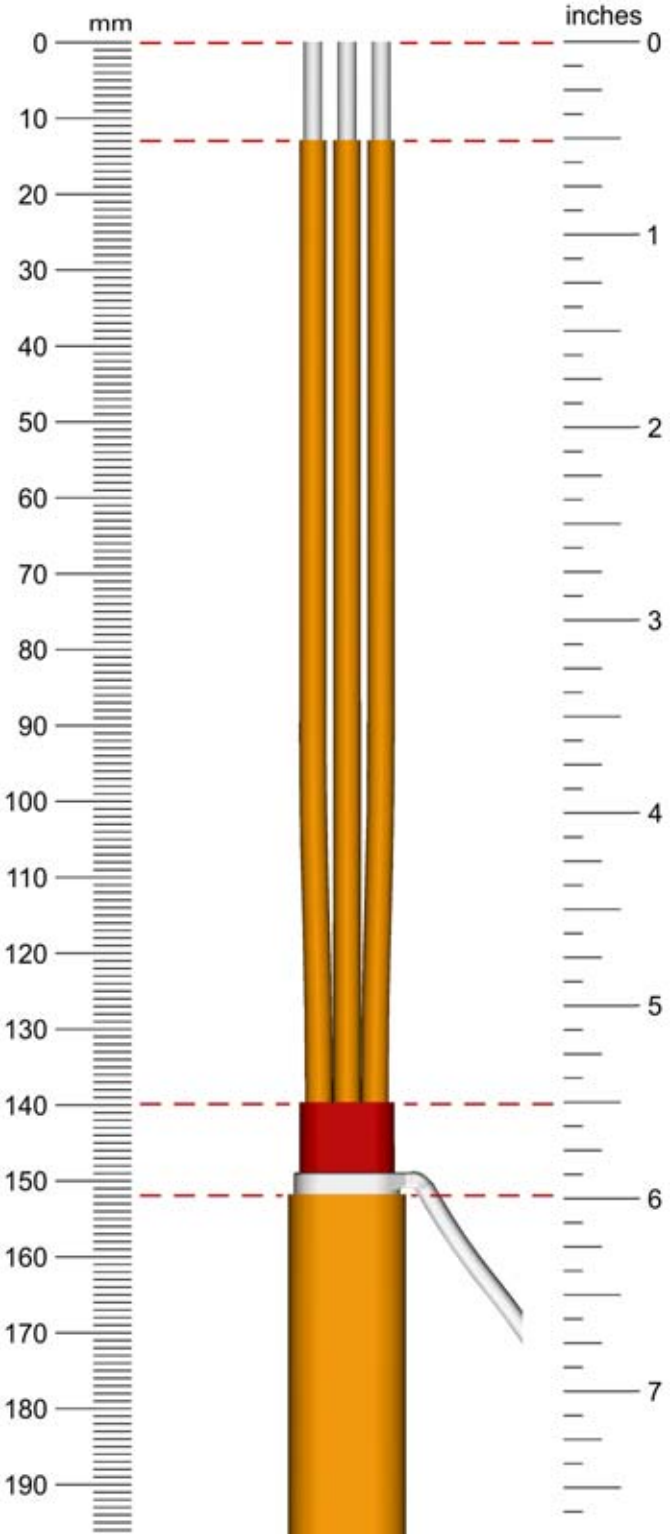

Form No. 50828 (08/25/04)

Thermon Manufacturing Company
100 Thermon Drive • P.O. Box 609 • San Marcos, Texas 78667-0609
Phone: (512) 396-5801 • Fax: (512) 396-3627 • 1-800-820-HEAT
www.thermon.com