PRODUCT SPECIFICATIONS

ThermTrac™ SKIN EFFECT HEATING SYSTEMS

APPLICATION

A ThermTrac system provides a cost-effective alternative to conventional resistance heat tracing on long pipelines by eliminating the need for an extensive power distribution system. A pipeline up to 15 miles (25 kilometers) long can be traced from a single power point. The versatility of the system makes it ideal for temperature maintenance, freeze protection and heat-up applications.

The system generates heat in the heat tube by the return electrical current flowing through the impedance of the inner skin of the heat tube. There is no voltage or current on the outer skin of the heat tube.

The ThermTrac insulated conductor is the heart of Thermon's skin effect heating system. This conductor is custom designed by Thermon with dielectric insulation and scuff jacket to meet specific project applications. For freeze protection and low temperature maintenance applications, polyolefin-insulated copper conductors may be utilized. Fluoropolymer-insulated conductors provide superior temperature, flexibility and durability properties necessary for higher temperature applications.

RATINGS [1]

Power Outputs.....up to 50 W/ft (165 W/m)
System operating voltages .....up to 5 Kv
Maintenance temperature..... up to 392°F (200°C)
Exposure temperature.....up to 500°F (260°C)
Minimum installation temp. .....down to -40°F (-40°C)
T-rating [2] .....T2 to T6

Notes

1. Each ThermTrac system is custom designed for the application. Please consult Thermon for specific project details.
2. Hazardous area temperature classifications are determined for each installation in accordance with the guidelines set forth in IEEE Std 844, IEEE Recommended Practice for Electrical Impedance, Induction, and Skin Effect Heating of Pipelines and Vessels.
3. Power transformers for skin effect trace heating systems are custom manufactured to meet the specific design application requirements. These transformers shall be of the shielded and isolated type. The secondary of the skin effect heating system transformer shall not be grounded.

CERTIFICATIONS/APPROVALS

FM Approvals
Ordinary Locations
Hazardous (Classified) Locations
Class I, Division 2, Groups B, C and D
Class II, Division 2, Groups F and G
Class III, Divisions 1 and 2
Class I, Zone 2, Group IIC

DEKRA 12ATEX0175X
II 2 G Ex eb IIC T2-T6
II 2 D Ex tb IIIC T300°C to T85°C

International Electrotechnical Commission
IEC Certification Scheme for Explosive Atmospheres
DEK 12.0055X

CONSTRUCTION

1 Stranded, nickel-plated copper conductor
2 Fluoropolymer or polyolefin dielectric insulation
3 Fluoropolymer or polyolefin scuff jacket
4 Carbon steel heat tube

TYPICAL WIRING DIAGRAM, SINGLE PHASE SUPPLY

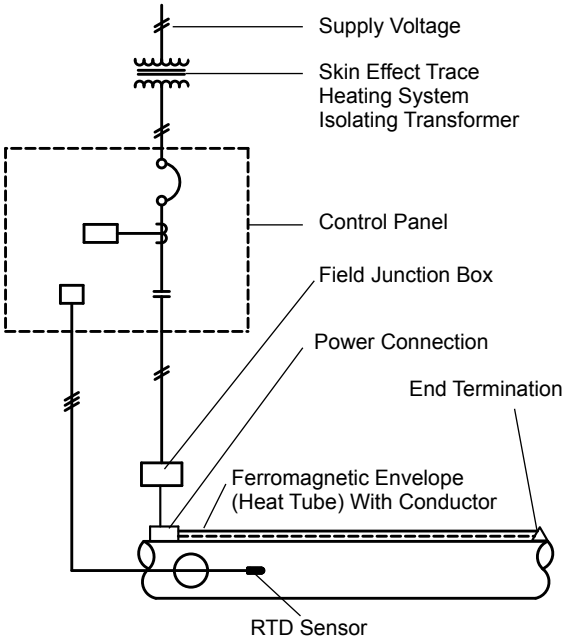

THERMON **The Heat Tracing Specialists®**
ISO 9001 REGISTERED
Corporate Headquarters:100 Thermon Dr • PO Box 609 San Marcos, TX 78667-0609 • Phone: 512-396-5801 • 1-800-820-4328
For the Thermon office nearest you visit us at . . . www.thermon.com

Form TEP0096-0714 • © Thermon Manufacturing Co. • Printed in U.S.A. • Information subject to change.

OPERATING CHARACTERISTICS

The operating principle of a ThermTrac skin effect heating system is based on two phenomena: proximity effect and skin effect. The heating device is a carbon steel pipe called a "heat tube" with a specially designed skin effect conductor inside. The heat tube and insulated conductor are joined together at one end, while at the opposite end the heat tube and the conductor are connected across an AC voltage source

When the system is energized, current flows through the conductor to the end point, then is concentrated toward the inner surface of the heat tube by the skin effect phenomenon and the attendant proximity effect. This electromagnetic interaction ensures that the return current travels on the inner surface of the heat tube with virtually no measurable voltage on the outer surface. The current flow through the impedance of the inner skin of the heat tube generates heat.

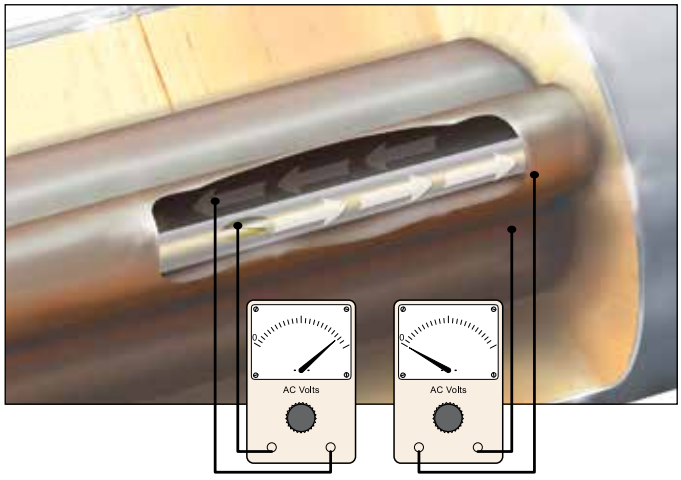

AC voltage will generate a current in the conductor which returns through the inside surface of the heat tube. There is virtually no measurable voltage on the outer surface of the heat tube, allowing the piping system to be grounded.

TYPICAL THERMTRAC SYSTEM

ThermTrac Power Connection, Pull/Splice, and End Termination Boxes are integral to the skin effect heating system and carry current in the same manner as the heat tube. These boxes are constructed of heavy wall ferromagnetic materials and must be welded to the heat tube to ensure the continuity of the skin effect electrical path. The boxes are constructed to conform to the carrier pipe and provide water-resistant protection with gasketed, bolted covers.

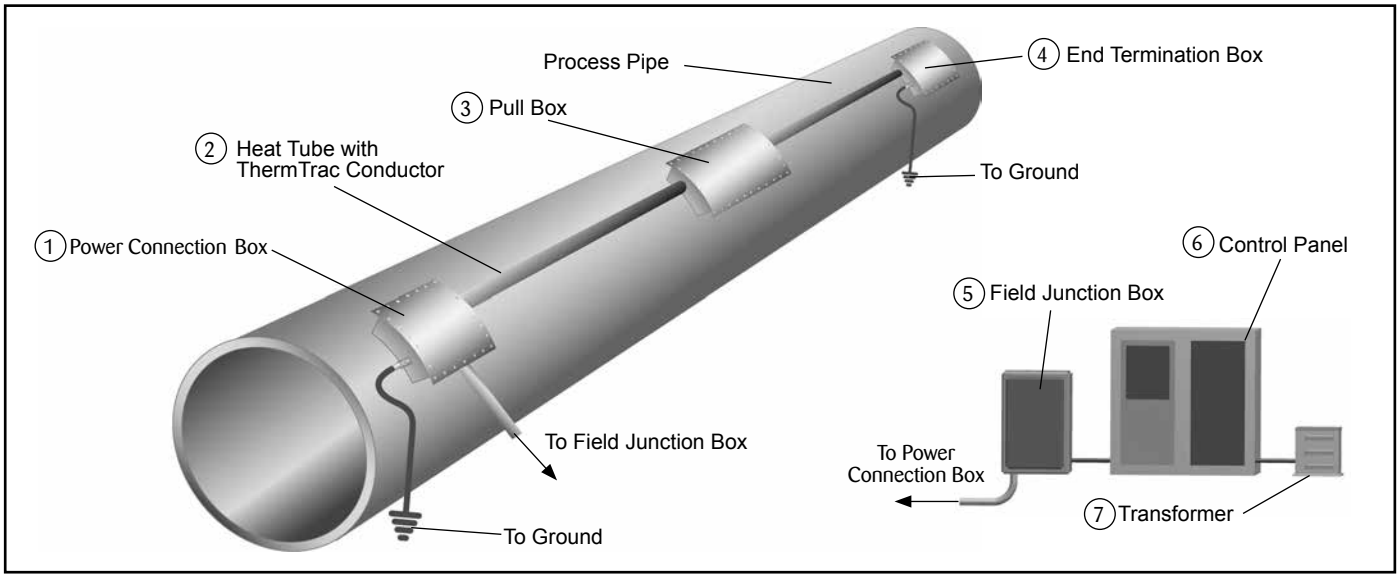

1. Power Connection Box: Located at the power feed end of the ThermTrac circuit, the power connection box permits the connections that supply electrical energy to the system. An external tab on the box permits grounding of the system.

2. Ferromagnetic Heat Tube: Used to produce heat based on the two phenomena of proximity effect and skin effect.

3. Pull Box: Located periodically along the heat-traced pipe, this box permits access for installing the ThermTrac conductor. The box is sized to provide for expansion/contraction of the conductor, and versions of the box allow the heat tube to cross over the carrier pipe if necessary at elevation or directional change points.

4. End Termination Box: The design and construction of the end termination box allows the ThermTrac conductor and heat tube to be joined together thereby allowing electrical current to return to the power connection box via the inside surface of the heat tube. An external tab on the box permits grounding of the system.

5. Field Junction Box: Located between the Power Connection and the Load Center it provides an access point to terminate the ThermTrac conductor and the power feed wiring.

6. Control Panel: Typically consists of all electrical power, control and monitoring devices.

7. Transformer: Custom transformer equipped with over and under voltage taps.